EUROPACK

Manufacturers of Highest Technology Egg Packaging. Est. 1979

...presents new 30 ECO line

"Makes your eggs more visible"

Base available in GLKL/Black

Egg breakage reduction - **strong** and **robust** design

Made from **100% recycled** post-consumer waste material and is **100% recyclable** again

An all around better fit

The 30 ECO eggpacks interlock securely

Transport

Measurements:

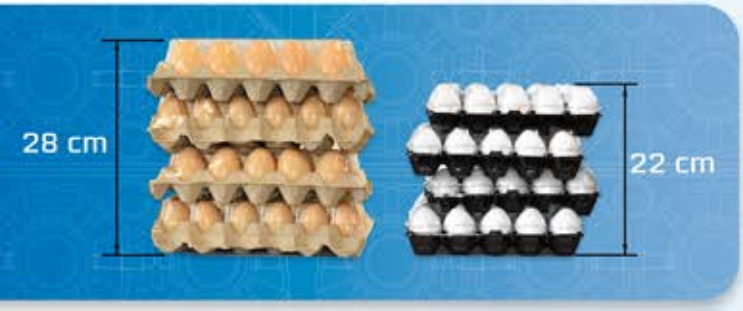

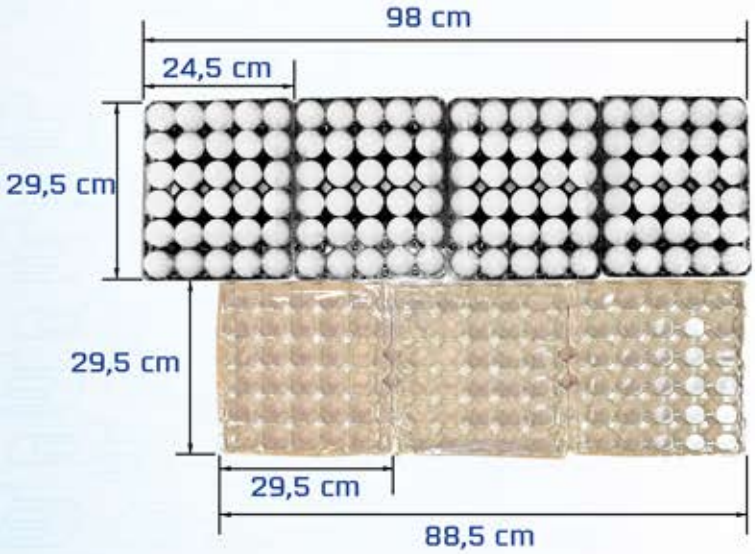

In boxes:

On pallets:

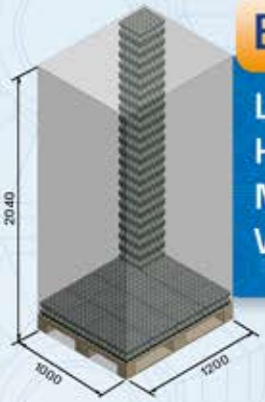

Existing system

Layers on palette: 27
Height of palette: 2,040 mm
Maximum eggs/truck: 252,720 pcs
Weight of eggs/truck: 11,372 kg

26 palette/truck

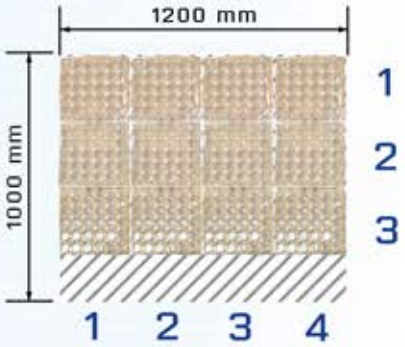

12 x 30 = 360 pcs of eggs/layer

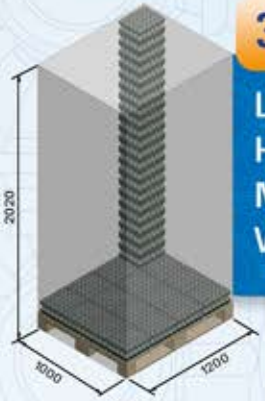

30 ECO line

Layers on palette: 34
Height of palette: 2,020 mm
Maximum eggs/truck: 424,320 pcs
Weight of eggs/truck: 19,095 kg

26 palette/truck

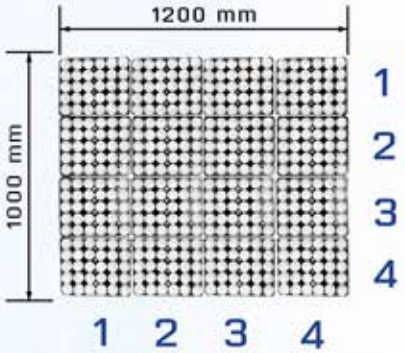

16 x 30 = 480 pcs of eggs/layer

Transport options

More pieces to a palette

up to **65% more** eggs/lorry as per existing system

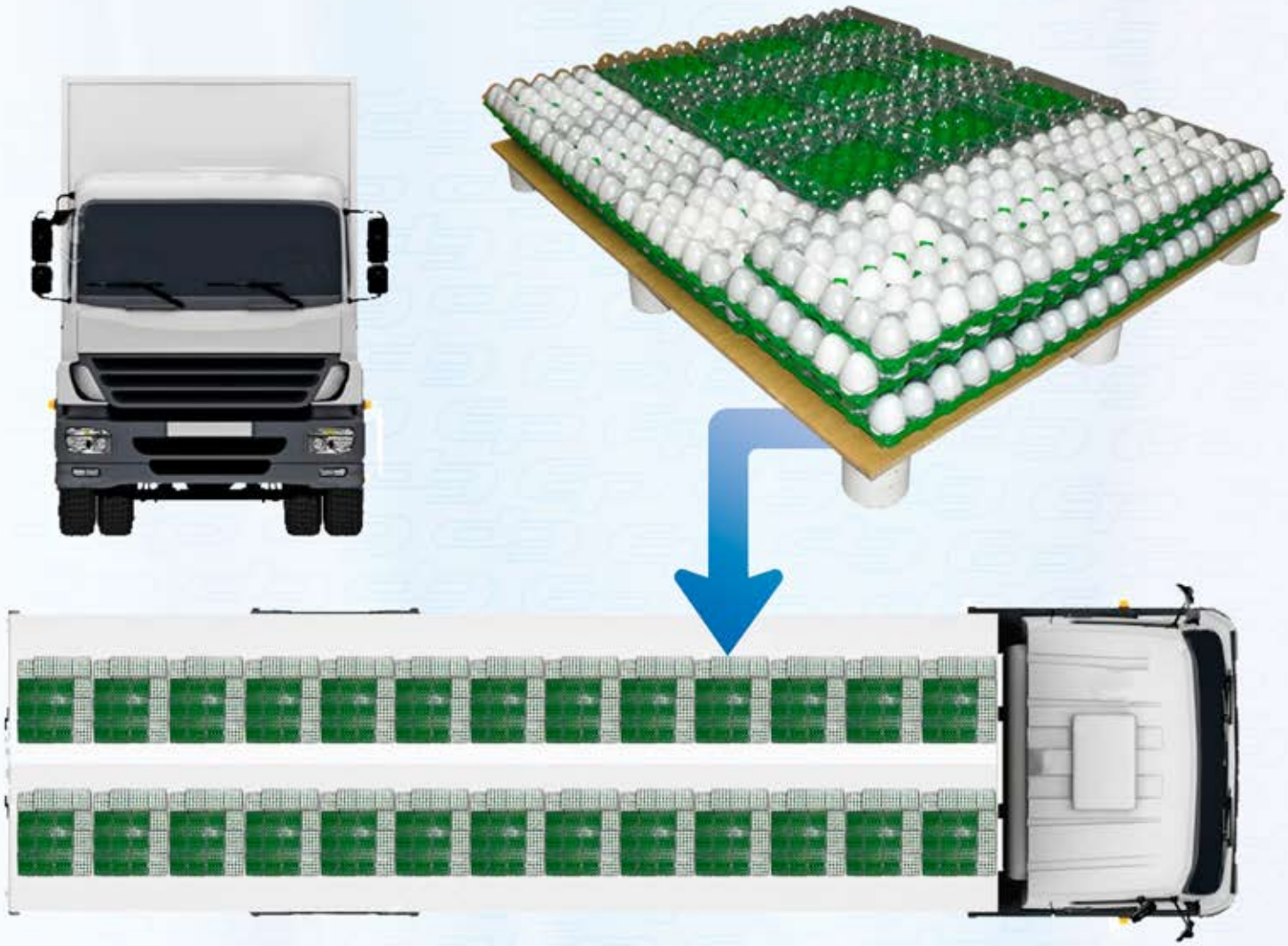

26 pallets (2 x 13) of 30 ECO eggpacks fit perfectly inside a standard lorry (13,6 m x 2,45 m x 2,65 m)

30 ECO vs Paper Tray

8200
pcs/palette
(80x120x216)

VS

3744
pcs/palette
(80x120x250)

Storage of packs without eggs:

- **more than 50%** pcs/palette
- **less than 50%** warehouse space
- **easy** handling

Production

- possibility of **fully automized/semi automized** packing (depending on the due date print neccesity)
- **lower** labour force
- **100%** Humidity resistance and Dust Free
- **65% less** space for storage with eggs

Transport to customers with eggs:

- **quantity maximization** on truck
- up to **65% more** eggs/truck

EP EUROPACK
www.europack.sk

For more info regarding EP packaging visit

Europack a.s., Vel'koblahovská cesta 680, 929 01 Dunajská Streda, SLOVAKIA
Tel.: +421 31 5577 262-6 / Fax: +421 31 5577 260 / sales@europack.sk

EUROPACK

* illustrative photo only

12/17

EP eco 1x30 R-PET (100% Recycled)

BOTTLE 2 EGG PACK®
www.bottle2eggpack.com

Basic information

Pack intended for packaging, storage, distribution and sale of hen eggs

Product code	836
Units / Pack	1 BASE (B) / 1 TOP (T)
Eggs / Unit	30
Caliber	**M** (53 g) - **L** (73 g)
Material	rPET (recycled Polyethyleneterephthalate)
Available in clarity	TOP: transparent BASE: black / transparent
Opening force / Clamp force	
Pressure	

Decoration

Label / Direct print	yes / no

Storage

Storage Time (maximum)	1 year
Storage Temperature (recommended)	from + 10°C to + 40°C
Storage Condition	**Do not expose to sunlight!**

Packing Station Setup

STAALKAT	ID = EP0012						Code OWN-33
MOBA (ONLY BASE)	ID = EP5603	L	G	J	l1	l2	jaw
		22	23	5	5	45	818

Automatic lid application and closure system available

Dimensions (Indicative)

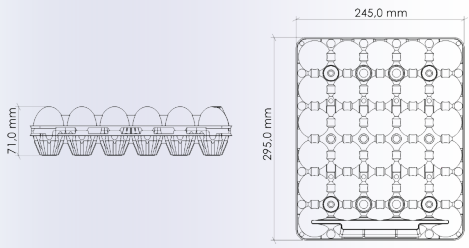

Delivery

Truck loading

		Container 45' HC
Pallet Dimensions	1220 x 800 x 2617 mm	1220 x 800 x 2347 mm
Volume of bag / Pieces per bag	0,0562 m3 / 205	0,0562 m3 / 205
Net Weight / Gross Weight of bag	8,41 kg / 8,50 kg	8,41 kg / 8,50 kg
pcs / pallet	8 200 (top or base)	7 380 (top or base)
pcs / lorry	131 200 sets (262 400 pcs top+base)	118 080 sets (236 160 pcs top+base)
pallet / lorry	32	32

Container loading

	Container 20'	**Container 40' HC**
Volume of bag / Pieces per bag	0,0562 m3 / 205	0,0562 m3 / 205
Net Weight / Gross Weight of bag	8,41 kg / 8,50 kg	8,41 kg / 8,50 kg
pcs / container	52 480 sets (104 960 pcs top+base)	128 330 sets (256 660 pcs top+base)
bundles / container	512	1 252

	Container 20'	**Container 40' HC**
Pallet Dimensions	1195 x 750 x 2077 mm	1195 x 750 x 2567 mm
Volume of bag / Pieces per bag	0,0542 m3 / 195	0,0542 m3 / 195
Net Weight / Gross Weight of bag	8,00 kg / 8,09 kg	8,00 kg / 8,09 kg
pcs / pallet	6 240	7 800 (top or base)
pcs / Container	40 560 sets (81 120 pcs top+base)	117 000 sets (234 000 pcs top+base)
pallet / Container	13	30

Wagon loading

	Hbbins	**Habbins**
Pallet Dimensions	1220 x 800 x 2102 mm	1220 x 800 x 2102 mm
Volume of bag / Pieces per bag	0,0562 m3 / 205	0,0562 m3 / 205
Net Weight / Gross Weight of bag	8,41 kg / 8,50 kg	8,41 kg / 8,50 kg
pcs / pallet	6 560 (top or base)	6 560 (top or base)
pcs / wagon	104 960 sets (209 920 pcs top+base)	177 120 sets (354 240 pcs top+base)
pallet / wagon	32	54

Member of International Egg Commission

British Lion Quality

Certified according to BRC/Iop Global Standard - Packaging

BRC PACKAGING CERTIFICATED

Ing. Ladislav Fazekas
vice-chairman

EUROPACK
Europack a.s., Veľkoblahovská cesta 680
929 01 Dunajská Streda, SLOVAKIA
Tel.: + 4 2 1 / 3 1 / 5 5 7 7 2 6 1
sales@europack.sk / www.europack.sk